SPECIALISED VEHICLE SOLUTIONS

SLV 702 Underground Light Vehicle

SPECIFICATIONS

Engine

Engine Model	Cat® C4.4 ACERT™	
Gross Power - SAE J 1995	74.5 kW	101 hp
Net Power - 80/1269/EEC	71 kW	97 hp
Net Power - ISO 9249	71 kW	97 hp
Net Power - SAE J1349	71 kW	97 hp
Number of cylinders	4	
Bore	105 mm	4.13 in
Stroke	127 mm	5 in
Displacement	4.4 L	268 in^3
Max. Torque	400 N·m @ 1400 RPM	
Derating altitude	3048 m	9,843 ft

- Power ratings apply at 2200 RPM when tested under the specified condition for the specified standard
- Ratings based on SAE J1995 standard air conditions of 25°C (77°F) and 99 kPa (29.32 in Hg) dry barometer. Power based on fuel having API gravity of 35 at 16°C (60°F) and an LHV of 42,780kj/kg (18,390 BTU/lb) when engine used at 30°C (86°F).
- Net power advertised is the power available at the fly-wheel when the engine is equipped with fan, air cleaner, muffler and alternator.
- No derating required up to 3,000 m (9,843 ft) rated

Weights - Approximate

Machine Operating Weight	3,500 kg	7,720 lb

- Chassis weight with 100% fuel, rims and tyres.

Suspension System

Front axle - centre pivot with individual air bags on each side
Rear Axle - trailing arm with individual air bags on each side

Transmission

Transmission	5 fwd / 1 rev countershaft powershift	
Travel Speed - Fwd. 1st	5.6 km/h	3.5 mph
Travel Speed - Fwd. 2nd	9.0 km/h	5.6 mph
Travel Speed - Fwd. 3rd	19.2 km/h	12.0 mph
Travel Speed - Fwd. 4th	27.1 km/h	16.9 mph
Travel Speed - Fwd. 5th	43.8 km/h	27.4 mph
Travel Speed - Rev. 1st	5.6 km/h	3.5 mph
Travel Speed - Rev. 2nd	11.9 km/h	7.4 mph
Travel Speed - Rev. 3rd	27.1km/h	16.9 mph

- Maximum Travel Speeds with 285/75 R16 tyres
- Travel speed on 1: 7 grade calculated 30 km/h 18.8 mph

Brakes

Brakes - Service Type	fully enclosed wet disc
Brakes - Parking Type	Fully enclosed wet disc

Steering

Type	Double acting cylinder	
Power steering	Hydrostatic	
Steering Cylinder- Bore	62.11 mm	2.45 in
Steering Cylinder- Stroke	61 mm	2.40 in

FOPS

- FOPS (Falling Object Protective Structure) meets AS2294.3

CAT, CATERPILLAR, ACERT, their respective logos, "Caterpillar Yellow" and the POWER EDGE trade dress, as well as corporate and product identity used herein, are trademarks of Caterpillar and may not be used without permission.

Materials and specifications are subject to change without notice.

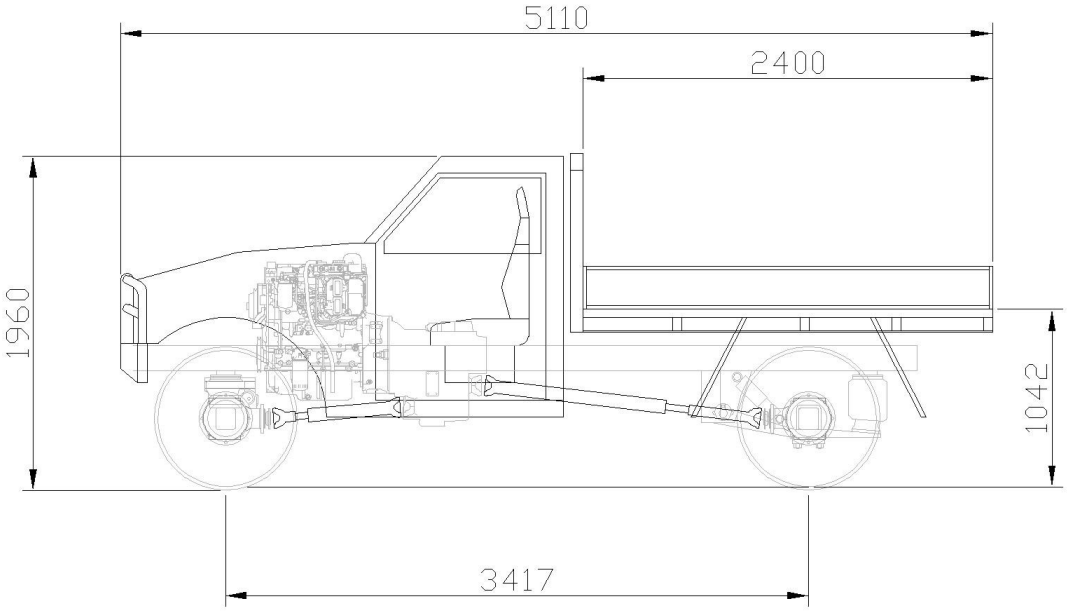

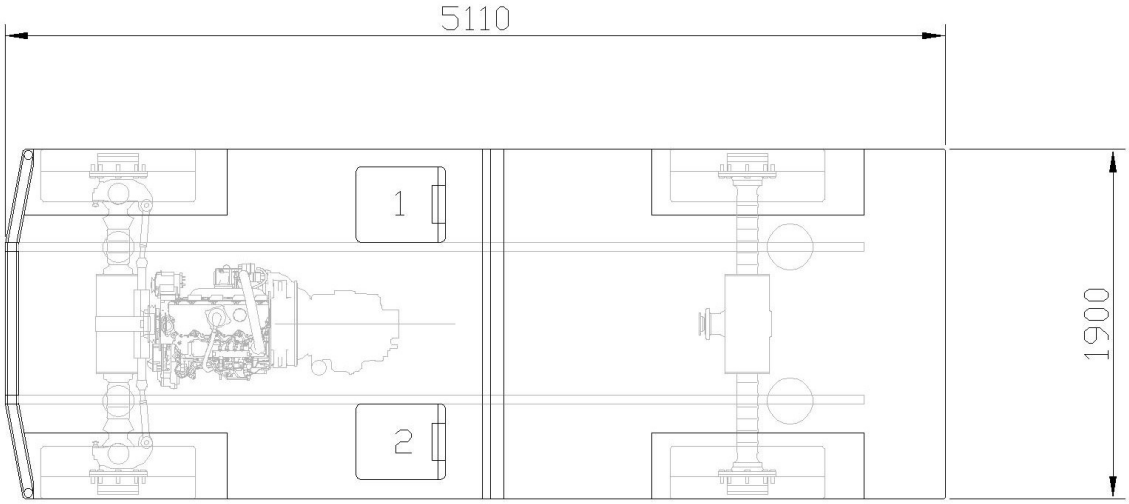

Dimensions

Overall Length	5110 mm	201.2 in
Overall Width	1900 mm	74.80 in
Tramming Height	1940 mm	76.37 in
Wheel Base	3417 mm	134.52 in
Wheel Track	1660 mm	65.35 in
Ground Clearance	230 mm	9.05 in
Outer Turning Radius	7681 mm	302.40 in
Tyres	285/75 R16	

Service Refill

Fuel Tank	95 L	23.8 gal
Cooling System	25 L	6.6 gal
Differentials Front / Rear	16 L	4.2 gal
Engine Oil	7.6 L	2.0 gal
Transmission, Torque Converter	19 L	5.0 gal

Electrical System

Alternator	120 amp
Electrical System	12v
Battery-Capacity	750 CCA
Starting System	Direct Electric